QUOTATION

INTERNATIONAL Syalons

From: **International Syalons (Newcastle) Ltd.**
Stephenson Street
Willington Quay
Wallsend
Tyne and Wear
NE28 6TT
UNITED KINGDOM

VAT No. GB 621 440 972
EORI No. GB 621 440 972 000
Company Reg No. 02943970

T: (+44) 0191 295 1010
E: enquiries@syalons.com
www.syalons.com

Customer: Nanoker
Contact Name: Violeta Torrecillas
Contact Email: v.torrecillas@nanoker.com
Contact Tel: (+34) 985 76 11 41
Address: Polígono de Olloniego
Parcela 22A, Nave 5
33660, Oviedo
Asturias (Spain)

Quotation Date: 03/03/2026
Validity: 5 weeks
Payment Terms: 30 days net of invoice
Delivery Terms: Ex Works (Newcastle)
Currency: Euro
Expected Delivery: 5 Weeks

Thank you for your enquiry, we are pleased to make the following offer:

Quote No.	Description	Drawing No.	Grade	Qty.	Unit Price
2610/33137	Roll Blank	T-20 M-9	Syalon 101	2	€231.24

Notes: 1mm grinding allowance to be added to drawing.

Regards,

Mick Bell
Operations Director

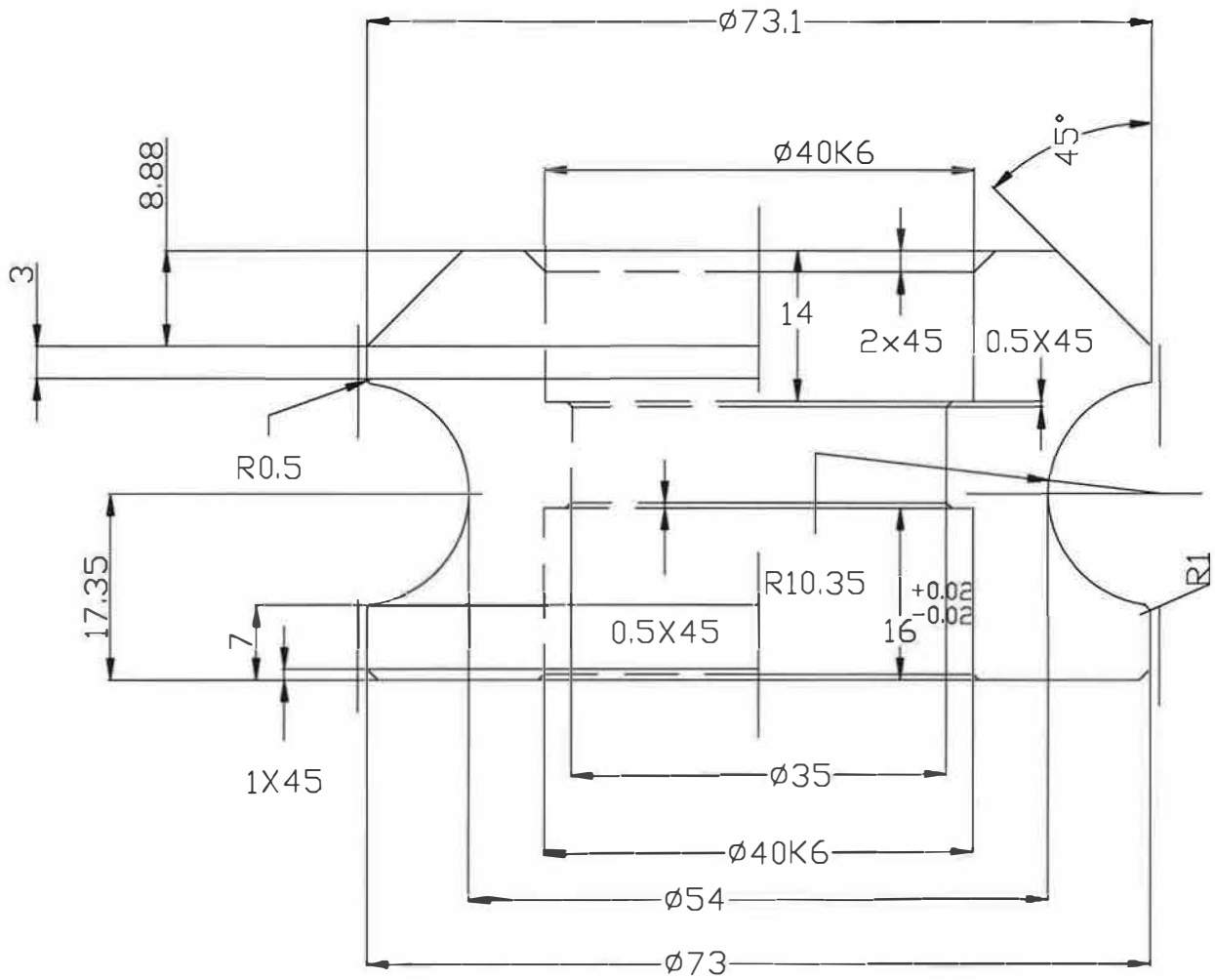

Marcar: Maquina,medida_tubo,pasada,material,radio,fecho,sello_fabricante,codigo_y_version

MATERIAL	MODELO	PESO	N_PIEZAS	CODIGO	VERSION
Nitruro de Silicio				D1433	03

	FECHA	FIRMA
DIBUJADO	16/11/20	Paco
COPIADO		
REVISADO		

-

ESCALA		
2:1	RODILLOS DE SOLDADURA T-20	M-9
		SUSTITUYE_A:
		SUSTITUIDO_POR: